PROPRIETARY
THIS DRAWING CONTAINS CONFIDENTIAL INFORMATION. PROPRIETARY TO GMW INC. IT MUST NOT BE REPRODUCED OR DISCLOSED TO OTHERS OR USED IN ANY OTHER WAY, IN WHOLE OR IN PART EXCEPT AS AUTHORIZED IN WRITING BY GMW INC.

REVISIONS				
REV	DESCRIPTION	DRAFT	DATE	APPROVED
A	RELEASE		02/20/07	G.DOUGLAS

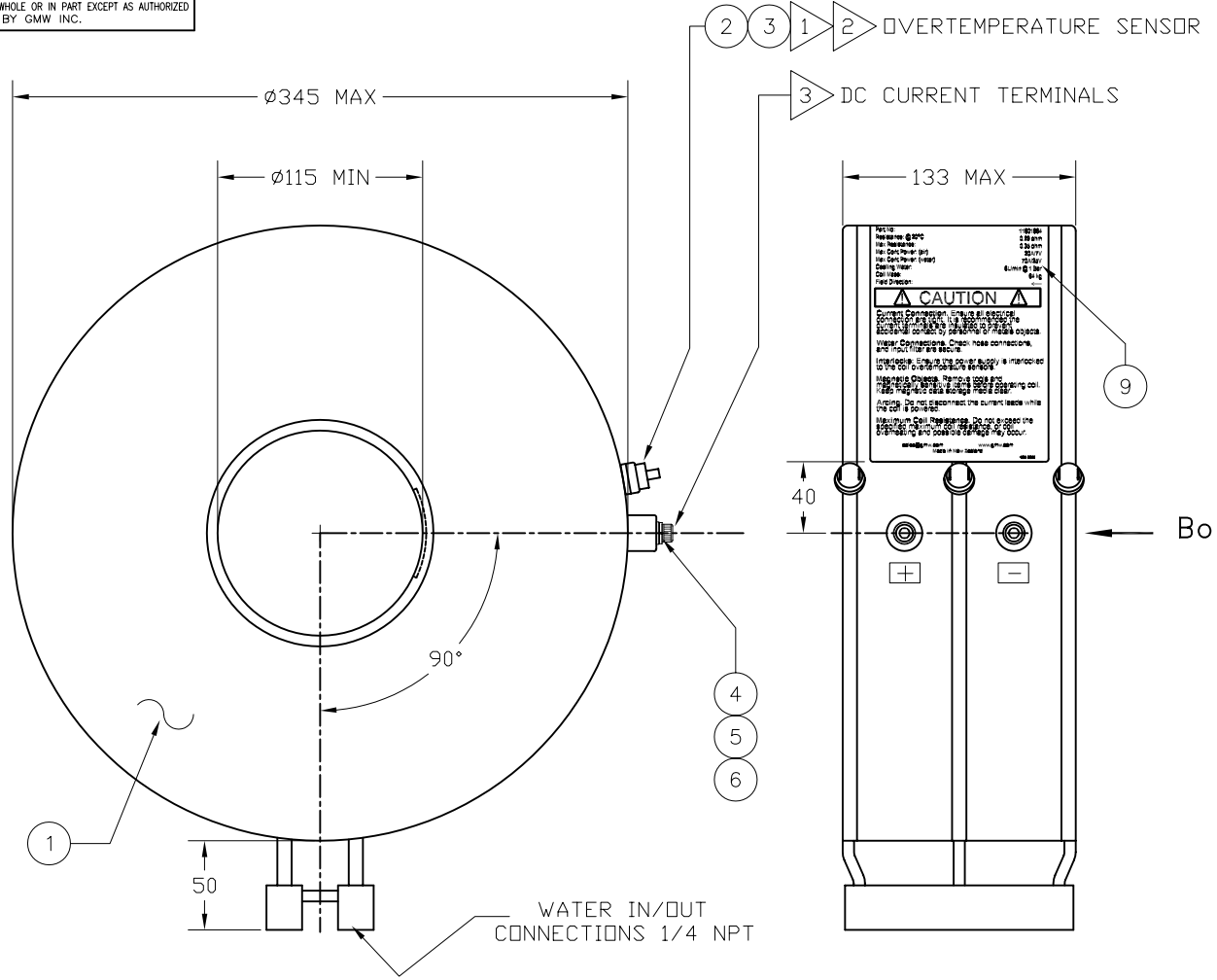

COIL DATA

CENTRAL FIELD @ 70A 0.16T
TOTAL TURNS PER COIL 460
COIL AMPERE TURNS = 32,200
RESISTANCE @ 20°C 0.29 ohm (2 P/CAKES IN SERIES)
MAX RESISTANCE 0.35 ohm (2 P/CAKES IN SERIES)
MAX CONTINUOUS POWER (air) 20A/7V dc (0.14kW)
MAX CONTINUOUS POWER (water) 70A/25V dc (1.75kW)
COOLING (WATER) 6L/min @ 1 BAR (15 PSID)
COIL MASS 64 kg

DO NOT EXCEED THE MAXIMUM SPECIFIED COIL RESISTANCE OR COIL OVERHEATING AND POSSIBLE DAMAGE MAY OCCUR.

ITEM	QTY	PART NUMBER	DESCRIPTION	NOTE
9	1	10907-0039-0	LABEL, SPECIFICATION-CAUTION [70 Amp]	
8	2	30182-4-4B	HOSE COUPLING,1/4 HOSE/NPT,BRASS,PARKER	
7	2	2214P-4-4	45° STREET ELBOW 1/4 NPT,BRASS, PARKER	
6	2	DIN 127 B	WASHER, M6 SPRING S/S	
5	2	DIN 125 A	WASHER, M6 FLAT S/S	
4	2	DIN 912	SHCS, M6 X 10, S/S	
3	3		WASHER, NEOPRENE 16 x 4 x 4	
2	3	3450G611-1	SENSOR 50° C, ELMWOOD	
1	1	11801862	COIL [70 Amp]	

PARTS LIST

NOTE:

1. APPLY A SMALL AMOUNT OF THERMAL GREASE TO THREAD ON SENSOR BEFORE FITTING ONTO COIL.

2. THE OVERTEMPERATURE SENSOR SHOULD BE INTERLOCKED TO THE COIL POWER SUPPLY. IN THE EVENT OF COOLING WATER FAILURE THE SENSOR WILL OPEN CIRCUIT SHUTTING DOWN THE COIL POWER SUPPLY.

3. DURING OPERATION DANGEROUS VOLTAGES CAN BE PRESENT AT THE COIL TERMINALS. IT IS RECOMMENDED THE TERMINALS ARE COVERED TO PREVENT ACCIDENTAL CONTACT OF PERSONNEL OR METAL TOOLS WITH THE LIVE TERMINALS. A METAL TOOL DROPPED ACROSS THE LIVE TERMINALS CAN PRODUCE A DANGEROUS ARC.

DRAWN G.DOUGLAS	DATE 11/30/06
CHECK	DATE
ENGINEERING	DATE
NEXT ASSY	SYSTEM
SOFTWARE AUTOCAD 2000	

DO NOT SCALE FROM DRAWING
DIMENSIONS & TOLERANCES (UNLESS OTHERWISE SPECIFIED)

LINEAR	INCHES	mm
X.XXX	±.005	±0.03
X.XX	±.01	±0.1
X.X	±.03	±0.3
X	±.06	±1
DEG.	±.5	±0.5
FINISH	63	1.6

THIRD ANGLE PROJECTION

GMW
955 Industrial Rd, San Carlos, CA 94070
Tel: (650)802-8292. Fax: (650)802-8298.

TITLE
COIL ASSEMBLY
MODEL: 3472-70

SIZE	DRAWING NO.	REV
A2	11801864	A

SCALE 1:2 | WT kg | SHEET 1 OF 1